ESTRUCTURES AEROESPACIALS

Beam structure: Wingbox

March 18th 2024

Consider the wing box of a wing modelled as a 1D beam, as depicted in Figure 1. The three-cell wing section consists of two vertical spar webs and the skin, but the loads are supported mainly by the intermediate cell (highlighted in black). The material Young's modulus is $E = 210$ GPa and the shear modulus is $G = 80$ GPa. The geometric parameters in Figure 1 are: $\xi_P = 0.3c$, $d = 0.3c$, $h_1 = 0.25c$, $h_2 = 0.15c$, $t_1 = 22$ mm, $t_2 = 15$ mm, and $t_3 = 3.5$ mm.

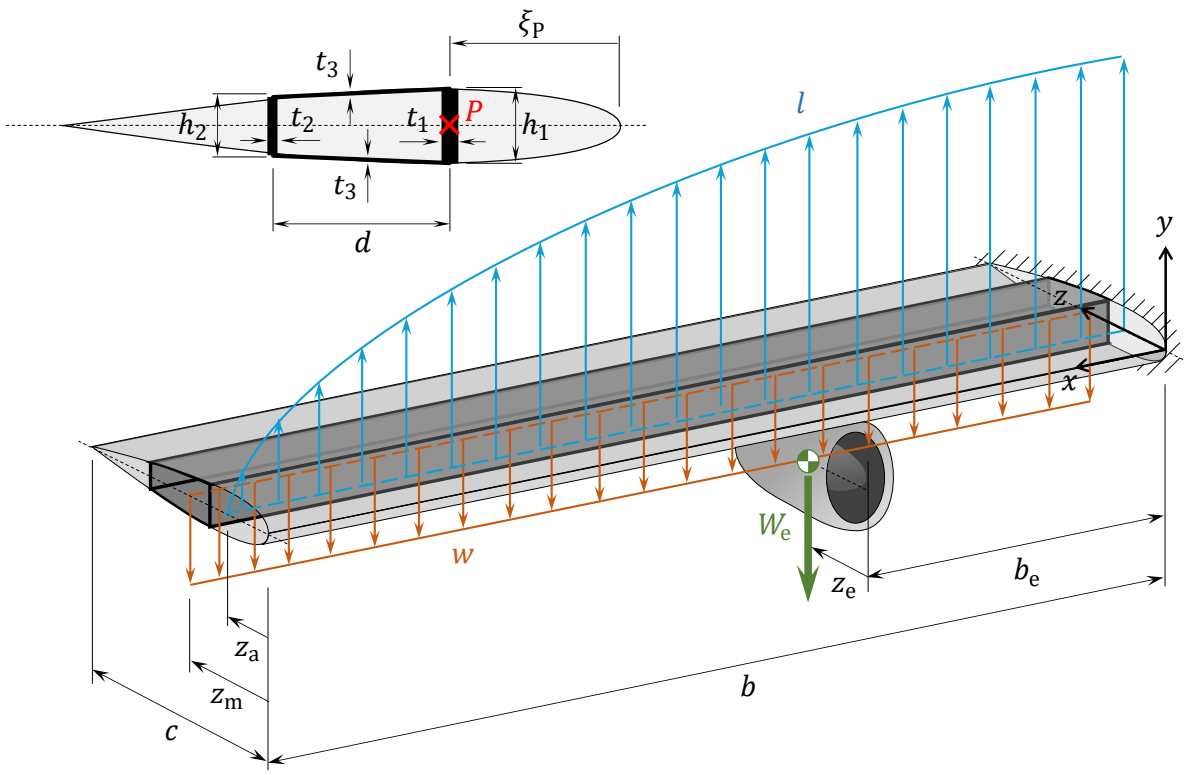

Fig. 1 Loads acting on the wing and geometry of the beam's section.

The wing is subjected to a distributed lift, l, acting on the aerodynamic centre line, located at a distance $z_a = 0.25c$ from the leading edge. It also supports its own weight, w, with a uniformly distributed mass $\lambda = 140$ kg/m along the centre of mass line, located at a distance $z_m = 0.48c$. Additionally, at the point depicted in Figure 1, with $b_e = 0.25b$ and $z_e = 0.3c$, the wing supports the weight of the engine of mass $M_e = 2100$ kg. For the lift, assume the following distribution:

$$l(x) = \frac{1}{2}\rho_\infty V_\infty^2 c C_l \sqrt{1 - \left(\frac{x}{b}\right)^2}$$

where $\rho_\infty = 1.225$ kg/m^3, $V_\infty = 750$ km/h, $C_l = 0.1$, $c = 2$ m, $b = 16$ m.

For these conditions, the following is asked:

A) Cross-section analysis:

a.1) Compute the centroid, bending inertia and normal stress distribution σ caused by a unit bending moment about the z-axis.

a.2) Assuming the section is **open** at point P, compute the torsional inertia, the shear center position and the tangential stress distributions $\tau_{\mathrm{o}}^{\mathrm{S}}$ and $\tau_{\mathrm{o}}^{\mathrm{T}}$ caused by unit shear load and torsion moment applied at shear center.

a.3) Assuming the section is **closed**, compute the torsional inertia and the tangential stress distribution $\tau_{\mathrm{c}}^{\mathrm{S}}$ and $\tau_{\mathrm{c}}^{\mathrm{T}}$ caused by unit shear load and torsion moment applied at the shear center. Assume the shear center in this case coincides with the section's centroid.

B) Beam analysis for both the closed and open section cases:

b.1) Implement a MATLAB code to numerically compute the following magnitudes' distributions along the beam:

a. Vertical deflection.
b. Section bending rotation.
c. Section torsion rotation.
d. Shear force.
e. Bending moment.
f. Torsion moment.

b.2) Study the convergence of the numerical solution for different element sizes in the beam's discretization: $h_{\mathrm{el}} = \{b/4,\ b/8,\ b/16,\ b/32,\ b/64\}$. To do so, compute the relative errors of the deflection and twist at the wing tip in each case compared to a reference case with a large number of elements (for this purpose, you can consider $h_{\mathrm{ref}} = b/512$).

$$\epsilon(h_{\mathrm{el}}) = \left| \frac{u_{h_{\mathrm{el}}} - u_{h_{\mathrm{ref}}}}{u_{h_{\mathrm{ref}}}} \right|$$

<u>Note</u>: Use a logarithmic scale in the axes of the plot.

b.3) For the reference case ($h_{\mathrm{el}} = b/512$), plot the magnitudes of b.1 along the wing span.

C) Apply the Von Mises criterion to locate the most critical point in the interior of the wing's structure for both the closed and open section cases. Do so considering:

$$\sigma_{\mathrm{VM}} = \sqrt{\sigma^2 + 3\tau^2}$$

The assignment can be done in groups of maximum two people. Only one of the members must submit a compressed ZIP file to Atenea containing the following:

- All the MATLAB® script files.
- A report documenting and discussing the results.